Complex Engineering Problem Intermediate Design and Progress Assessment (EE-354)

Project Title:

Smart Temperature and Humidity Monitoring System Using ATmega328P.

Project Team

S.No.	Name	Roll No.	Section
1	Muhammad Taha*	EE-23319	D
2	Ali Nasir	EE-23328	D
3	Farzam Shaikh	EE-23326	B
4	Ahmed	EE-23325	B

Summary of Progress:

This intermediate report documents the progress accomplished during the interface design phase of the Smart Temperature and Humidity Monitoring System, realised on an ATmega328P microcontroller running at 16 MHz. Development commenced with Proteus schematic design and component selection, followed by the implementation of a blocking I²C driver operating at 400 kHz to serve both the AHT20 digital sensor and the SSD1306 128×64 OLED display on a shared two-wire bus.

Sensor raw data conversion to fixed-point scaled integers was implemented without floating-point arithmetic, and a complete 5×7-pixel ASCII font was encoded in program flash memory. The multi-screen user interface comprising a live-data main screen, a system information screen, and two rolling bar-chart history graphs was developed and validated. A humidity-driven three-state finite-state machine (FSM) with hysteresis controls fan PWM duty cycle, buzzer timing, and tri-colour LED indication. Slide-in startup animations and a tick-based output scheduler operating at 100 ms resolution with zero blocking delays in the runtime path, were also completed. Full Proteus simulation confirmed correct operation across all defined alert states.

Task Completed

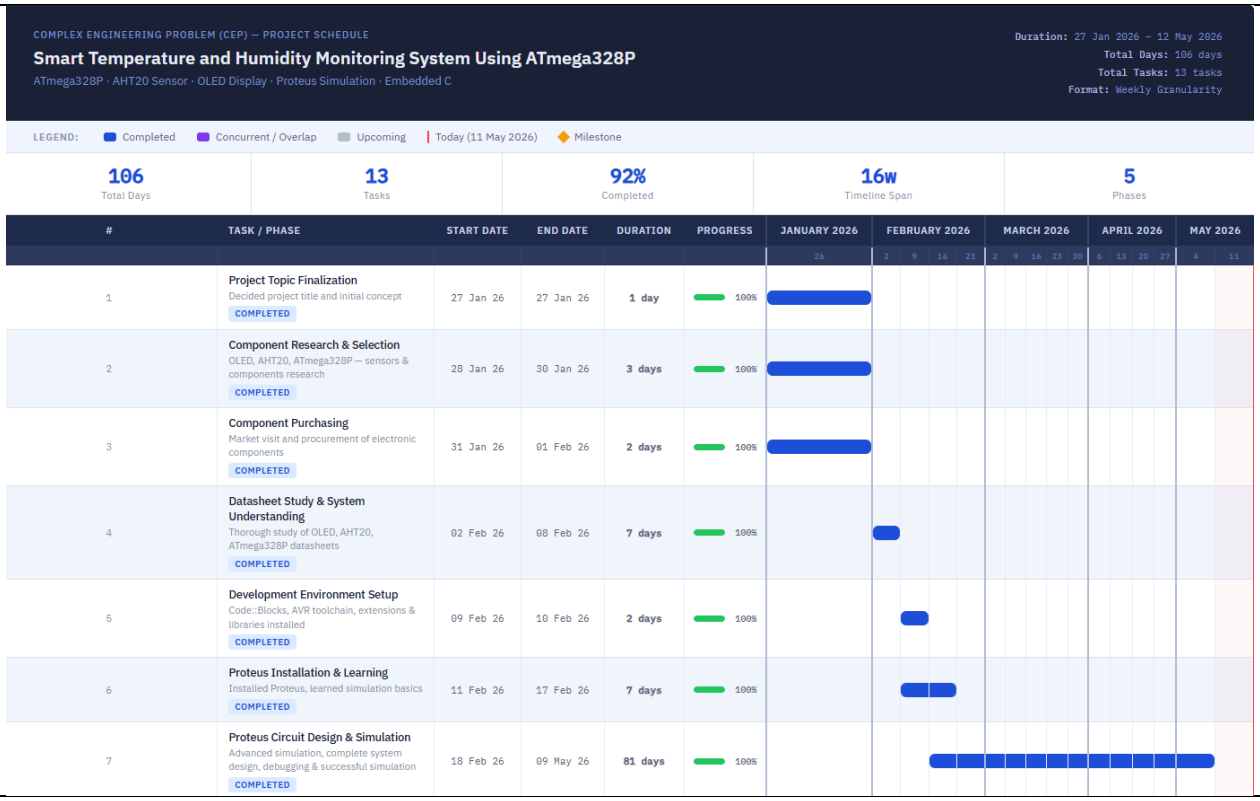

8	**Embedded C Programming** Developed and tested Embedded C code for full system CONCURRENT	03 May 26	09 May 26	7 days	100%
9	**Intermediate Report Preparation** Prepared and submitted intermediate project report COMPLETED	10 May 26	10 May 26	1 day	100%
10	**Breadboard Hardware Implementation** Hardware implementation and functional testing on breadboard UPCOMING	11 May 26	11 May 26	1 day	50%
11	**Vero Board Soldering & Final Assembly** Permanent hardware assembly on vero board UPCOMING	11 May 26	11 May 26	1 day	50%
12	**Final Report & Presentation Prep** Final documentation and slide preparation UPCOMING	11 May 26	11 May 26	1 day	50%
13	**◆ Final Submission, Viva & Evaluation** Final presentation, viva defense, hardware evaluation — Milestone UPCOMING	12 May 26	12 May 26	1 day	0%

Interface Design

1) OLED Display for Temperature and Humidity Monitor

1.1 Communication Protocol and Hardware Interface

The SSD1306 OLED display module communicates with the ATmega328P via the I²C (Inter-Integrated Circuit) two-wire serial protocol. I²C was selected over SPI to minimize pin consumption, since the same SDA and SCL bus is shared with the AHT20 sensor, requiring only two conductors for both peripherals. SDA connects to pin PC4 (A4) and SCL to pin PC5 (A5), corresponding to the dedicated TWI hardware port of the ATmega328P. The display responds at the 7-bit I²C address 0x3C; its write address is therefore 0x78. The TWI peripheral is configured for 400 kHz Fast-mode by setting TWBR = (F_CPU / SCL − 16) / 2 with TWSR presale bits cleared to zero.

1.2 OLED Initialization Sequence

A 100 ms power-on stabilization delay precedes OLED configuration. A 23-command initialization sequence is then transmitted over I²C; the entire sequence is stored in AVR program flash using the PROGMEM attribute to conserve the 2 KB SRAM. Each command is sent as an I²C write to address 0x78 with control byte 0x00 preceding the command byte. Table 1 identifies the most critical commands and their functional roles.

Command (Hex)	Function Name	Purpose
0xAE	**Display OFF**	Disables the panel during configuration to prevent display glitches
0xD5, 0x80	**Clock Divide / Oscillator**	Sets the internal oscillator frequency and clock divide ratio
0xA8, 0x3F	**Multiplex Ratio**	Configures 64-row multiplexing for full 128×64 resolution
0x8D, 0x14	**Charge Pump Enable**	Activates the internal charge pump required for OLED pixel drive
0x20, 0x00	**Horizontal Addressing**	Selects horizontal address mode; column pointer auto-increments and wraps
0xA1	**Segment Re-map**	Horizontally mirrors the display for correct physical orientation
0xC8	**COM Scan Direction**	Inverts vertical scan direction to match display mounting
0x81, 0xCF	**Contrast Level**	Sets pixel brightness to 0xCF (high) for ambient readability
0xD9, 0xF1	**Pre-charge Period**	Configures pre-charge timing for stable pixel voltage
0xAF	**Display ON**	Activates the panel after all parameters have been configured

Table 1.2: OLED Initialization Sequence

1.3 Custom 5×7 Pixel Font and Character Rendering

A complete 5×7-pixel bitmap font covering all printable ASCII characters (code points 0x20–0x7E) is encoded as a two-dimensional uint8_t array stored in program flash with the PROGMEM attribute. Each character occupies five bytes, one per vertical column, where bit 7 represents the topmost pixel. A sixth zero byte appended per character provides one pixel of horizontal inter-character spacing, yielding an effective rendered width of six pixels per character.

The oled_ch() function retrieves glyph bytes from flash via pgm_read_byte() and transmits them as data bytes (I²C control byte 0x40) after setting the cursor position with oled_pos(). The higher-level oled_str() iterates over a null-terminated string, invoking oled_ch() for each character and advancing the column pointer. A specialized oled_str_slide() function accepts a signed 16-bit x-offset, enabling text to start from off-screen positions (>127 pixels) for the startup slide-in animation effect.

1.4 Fixed-Point Arithmetic and Sensor Value Conversion

To eliminate the significant flash-memory overhead of AVR floating-point library routines, all sensor values are maintained as scaled integers. Temperature is stored as tc10 (signed int16_t, units of 0.1 °C) and humidity as hp10 (unsigned uint16_t, units of 0.1 %). A reading of 25.3 °C is therefore represented as the integer 253; a humidity of 45.6 % as 456.

Raw AHT20 conversion follows the sensor datasheet formulae, implemented entirely in integer arithmetic:

hp10 = (H × 1000) » 20 [Humidity in 0.1 % units]

tc10 = ((T × 2000) » 20) − 500 [Temperature in 0.1 °C units]

The fmt1() utility function formats these integers into null-terminated strings of the form “XX.X” for OLED rendering, avoiding printf/sprintf entirely.

1.5 Screen Architecture and Display Update Cycle

The 128×64 pixel frame buffer is structured as eight horizontal pages (Page 0–7), each eight pixels tall. The four runtime screens each occupy all eight pages with distinct layouts. The Main screen (Screen 0) allocates Page 0 to a solid header bar, Pages 2–3 to live sensor readings, Page 5 to the FSM status label, Page 6 to a proportional humidity bar meter, and Page 7 to the navigation hint line. The System Info screen (Screen 1) shows state, LED condition, fan duty, and buzzer mode. Screens 2 and 3 present rolling 21-sample bar-chart histories for temperature and humidity respectively, with Y-axis labels and threshold guide lines.

The sensor is polled every 2 s in the main loop. After each read the active screen’s draw function rewrites only the affected pages over I²C. A redraw flag triggers a full oled_clear() before the first render following any navigation event, preventing page-level artefacts from overlapping content.

1.6 Dummy Data Verification on OLED

Prior to AHT20 integration, the OLED driver was validated by transmitting fixed dummy values, tc10 = 250 (25.0 °C) and hp10 = 400 (40.0 %), and visually inspecting the Proteus OLED model output. Figure 1 and Figure 2 confirm correct character rendering, decimal formatting, and page layout for both the Main screen and the System Info screen.

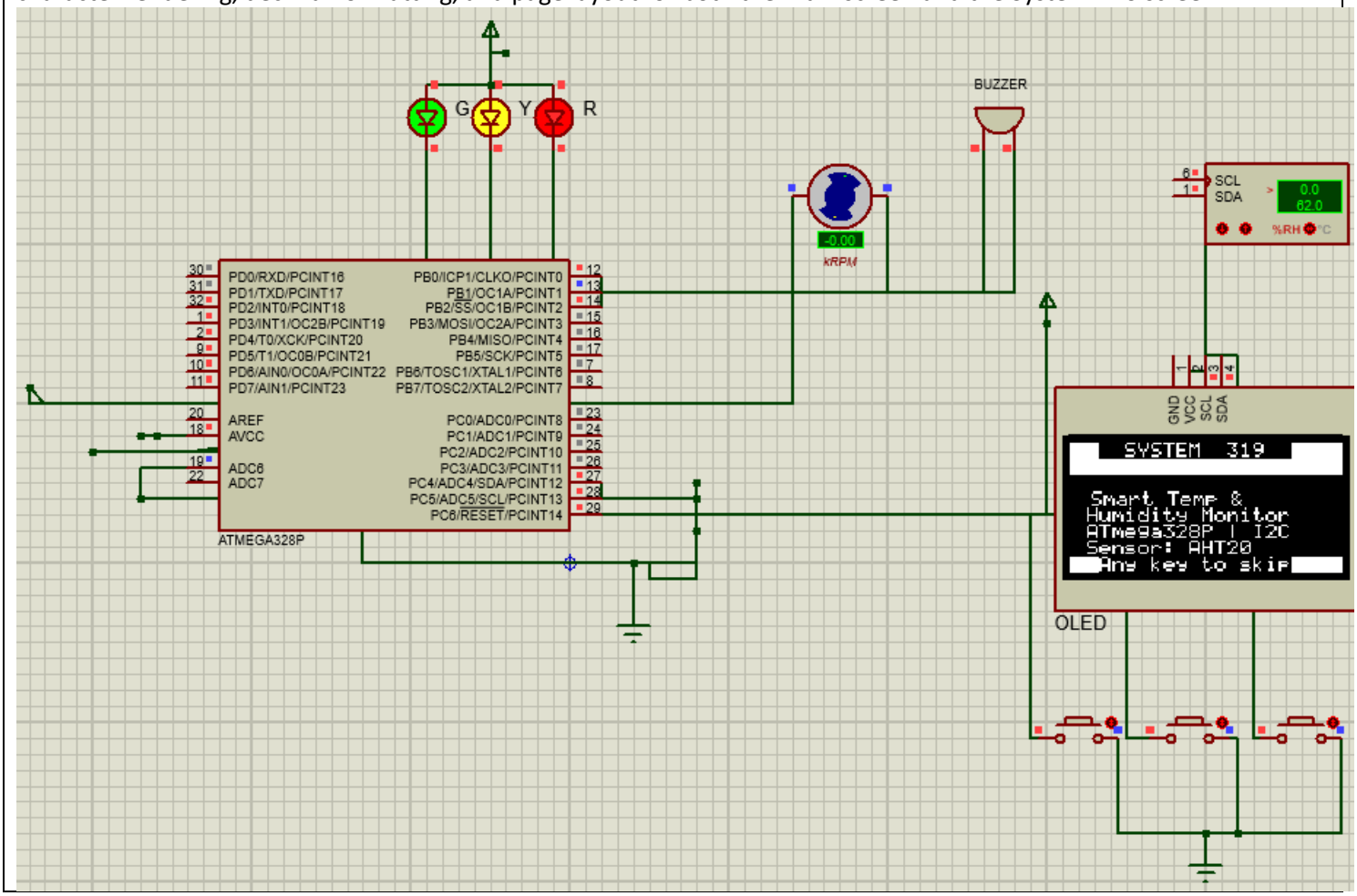

Figure 1.6: Dummy Display

2) Complete Schematic and Description for User Interface

2.1 System Architecture Overview

Figure 3 presents the complete Proteus 8 schematic. The ATmega328P microcontroller operates as the central processing element, orchestrating data acquisition from the AHT20 sensor, visual feedback through the SSD1306 OLED, mechanical cooling via a PWM-driven fan, auditory alerting through an active buzzer, and visual indication through a tri-colour LED bank. All I²C devices share a single two-wire bus, while dedicated GPIO pins drive the remaining output actuators. Three user-facing push-buttons provide runtime navigation across the four display screens.

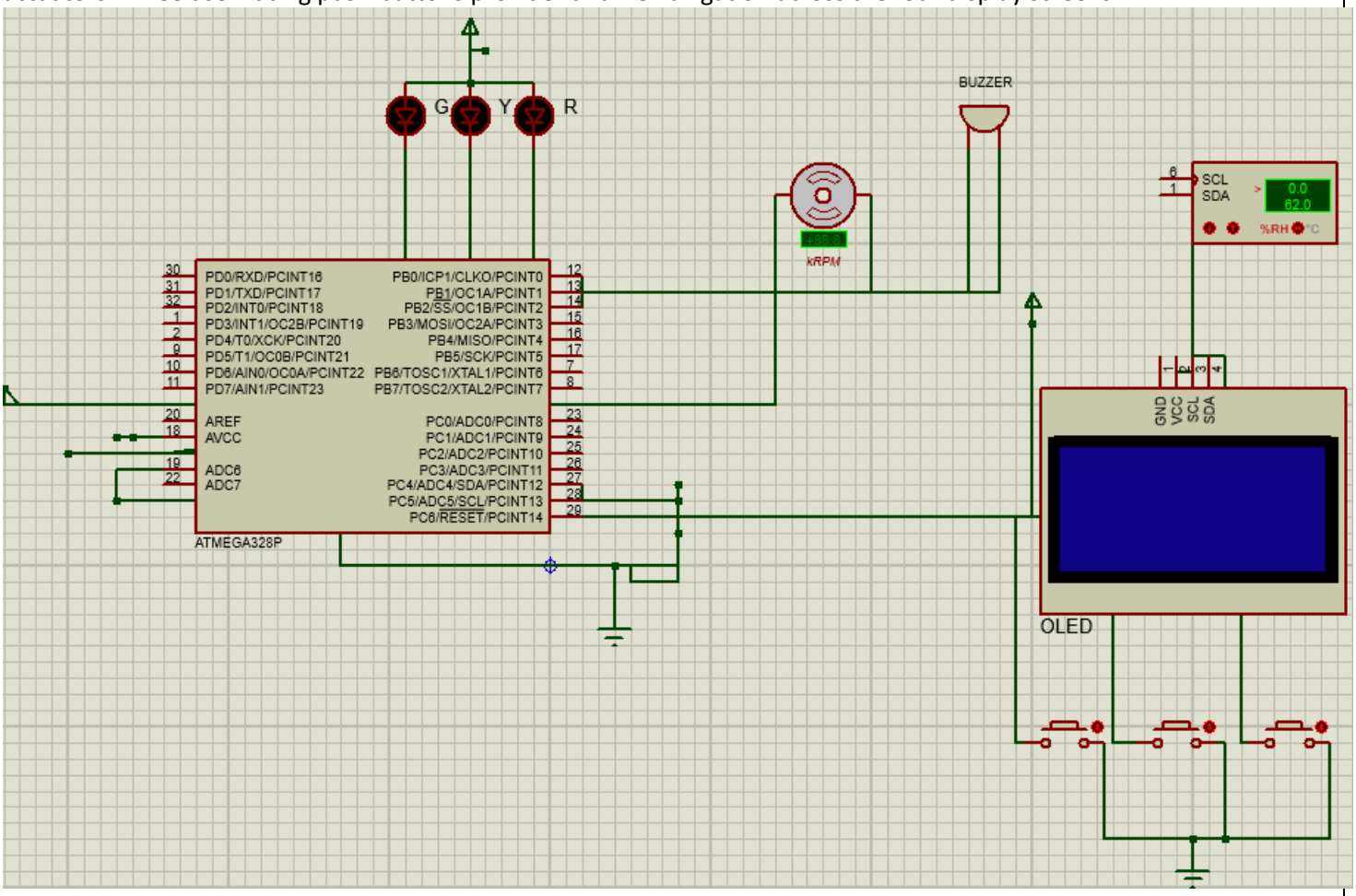

Figure 3: Complete Proteus System Schematic

2.2 Microcontroller Pin Assignment

Table 2 details the complete I/O pin allocation for the ATmega328P. Assignments were made to align peripheral functions with dedicated hardware peripherals wherever possible: the I²C bus uses the hardware TWI port (PC4/PC5), and fan PWM uses the Timer1 OC1A output (PB1), eliminating any need for software bit-banging of timing-critical signals.

Arduino Pin	MCU Port	Peripheral	Function / Configuration
A4	**PC4**	TWI SDA	I²C data — AHT20 + SSD1306 shared bus (400 kHz)
A5	**PC5**	TWI SCL	I²C clock — AHT20 + SSD1306 shared bus
D9	**PB1**	OC1A / Fan PWM	Timer1 Fast-PWM 8-bit; OCR1A sets fan duty cycle
D8	**PB0**	Buzzer Drive	Active-LOW; LOW = ON, HIGH = OFF
D4	**PD4**	LED Green	Status indicator — NORMAL state
D5	**PD5**	LED Yellow	Status indicator — MEDIUM ALERT state
D6	**PD6**	LED Red	Status indicator — HIGH ALERT state
D2	**PD2**	Button RIGHT	Next screen (active LOW, internal pull-up, 30 ms debounce)
D3	**PD3**	Button LEFT	Previous screen (active LOW, internal pull-up, 30 ms debounce)
D7	**PD7**	Button MAIN	Return to Screen 0 (active LOW, internal pull-up, 30 ms debounce)

Table 2.2: Microcontroller Pin Assignment

2.3 AHT20 Sensor Subsystem

The AHT20 capacitive humidity and resistive temperature sensor is connected at I²C address 0x38 on the shared bus. Its SDA and SCL lines are pulled to the supply rail through resistors to maintain valid logic-HIGH levels during idle bus periods. The sensor is powered from a 3.3 V rail; in Proteus simulation it is represented by the virtual AHT20 instrument, which accepts direct numeric inputs for %RH and °C and is visible on the SCL/SDA monitor panel adjacent to the microcontroller.

Measurement is initiated by transmitting the trigger command sequence {0xAC, 0x33, 0x00}. An 80 ms conversion delay is observed, after which six bytes are read. Bytes 1–3 yield the 20-bit raw humidity word H and bytes 3–5 yield the 20-bit raw temperature word T (with byte 3 shared). Both words are converted to fixed-point scaled integers as described in Section 1.4.

2.4 SSD1306 OLED Display Subsystem

The SSD1306 OLED module is wired with GND, VCC, SCL, and SDA connected to system ground, 5 V supply, and the shared I²C bus respectively. A 100 nF decoupling capacitor should be placed at the VCC pin in hardware (assumed in the schematic). The Proteus SSD1306 model faithfully renders 128×64-pixel output, enabling full visual verification of all four screen layouts without requiring physical hardware. Command bytes are distinguished from data bytes by the I²C control byte transmitted immediately after the device address: 0x00 precedes command bytes and 0x40 precedes pixel column data bytes.

2.5 Fan Speed Control

Cooling fan speed is regulated through Timer1 configured in Fast-PWM 8-bit mode (WGM10 + WGM12), with OC1A (PB1, D9) as the compare output pin and a prescaler of 8. This yields a PWM switching frequency of f_PWM = F_CPU / (8 × 256) ≈ 7.8 kHz, which is appropriate for small brushless DC fans. The OCR1A register is set to one of three values corresponding to the FSM state: 0 (0 % — fan off, NORMAL state), 102 (40 % duty, MEDIUM alert), or 230 (90 % duty, HIGH alert). Table 3 summarises the PWM operating points.

FSM State	OCR1A Value	Duty Cycle	Purpose
NORMAL	0	0 %	Fan off; no cooling required
MEDIUM	102	40 %	Moderate airflow; humidity 30 %– 70 %
HIGH	230	90 %	Maximum airflow; humidity > 70 %

Table 2.5: Fan Speed

2.6 Buzzer and LED Indicator Subsystem

The active buzzer is connected between PB0 (D8) and ground and is driven active-LOW a logic LOW energizes the buzzer and logic HIGH silences it. Buzzer behavior is scheduled by the 100 ms tick counter without any blocking delay: in the NORMAL state it remains off; in the MEDIUM state it sounds for 300 ms (3 ticks) and is silent for 2700 ms (27 ticks) per 30-tick cycle; in the HIGH state it sounds continuously.
Three LEDs green (PD4), yellow (PD5), and red (PD6) are each connected through a 220 Ω current-limiting resistor to ground. Assuming a supply of 5 V and a typical LED forward voltage of 2.0 V, the resistor limits forward current to approximately 13.6 mA, within the 40 mA GPIO source/sink limit of the ATmega328P. In the NORMAL state only the green LED is active; in the MEDIUM state both green and yellow are lit; in the HIGH state all three LEDs illuminate simultaneously, providing an unambiguous multi-modal alert.

2.7 Button Navigation Interface

Three momentary push-buttons provide user control of the display navigation. Each button is wired between a PORTD pin and ground; internal pull-up resistors enabled in firmware via PORTD eliminate the need for external passive components. A 30 ms denounce delay is applied after initial edge detection, followed by a confirming second read. After acting on a button press, firmware waits for release then observes a 40 ms settle period to suppress ghost-press detection. The RIGHT button (PD2) advances the screen index modulo 4 (Main → Info → Temp Graph → Hum Graph → Main), the LEFT button (PD3) decrements it (with wrap), and the MAIN button (PD7) unconditionally returns to Screen 0.

2.8 FSM Alert Logic and Hysteresis

The three-state humidity-driven FSM defines state transitions with ±1.5 % hysteresis bands around each threshold to prevent rapid toggling when the sensor reading oscillates near a boundary. Entry to the MEDIUM state requires humidity to reach 31.0 % (310 in hp10 units); the system returns to NORMAL only when humidity falls below 28.5 %. Entry to the HIGH state requires 71.0 %; return to MEDIUM requires the reading to drop below 68.5 %. Table 4 summarizes the complete transition table.

Current State	Transition To	Humidity Trigger	Actuator Changes
NORMAL	**MEDIUM**	≥ 31.0 %	Fan 40 %, Buzzer intermittent, Green+Yellow LEDs ON
NORMAL	**HIGH**	≥ 71.0 %	Fan 90 %, Buzzer continuous, All LEDs ON
MEDIUM	**HIGH**	≥ 71.0 %	Fan 90 %, Buzzer continuous, Red LED added
MEDIUM	**NORMAL**	≤ 28.5 %	Fan OFF, Buzzer OFF, Yellow+Red LEDs OFF
HIGH	**MEDIUM**	≤ 68.5 %	Fan 40 %, Buzzer intermittent, Red LED OFF
HIGH	**NORMAL**	≤ 28.5 %	Fan OFF, Buzzer OFF, Yellow+Red LEDs OFF

Table 2.8: FSM State Transition Table with Hysteresis

2.9 Data Flow Pipeline Summary

The end-to-end data pipeline operates as follows. The AHT20 is triggered over I²C every 2 s; the six-byte response is parsed to extract two 20-bit raw ADC words, which are converted to fixed-point scaled integers via integer arithmetic. The FSM evaluates the humidity value against threshold constants to determine the current alert state. Based on this state, the output controller called once per 100 ms tick updates: (i) OCR1A for fan PWM, (ii) the buzzer GPIO relative to the tick-counter modulo pattern, and (iii) the LED PORTD bits. The OLED draw function for the active screen is then invoked, transmitting updated values page by page over I²C. Simultaneously, each new sensor reading is pushed into a 21-element ring buffer that feeds the rolling bar-chart graph screens. The complete acquisition-to-display latency is bounded by one sensor conversion period (80 ms) plus the OLED page write time, well within the 2 s polling interval.

2.10 Complete Simulation Screenshots

The following figures present the Proteus simulation output for all startup animation frames and all four runtime screens, demonstrating correct operation of the complete user interface across every defined system state.

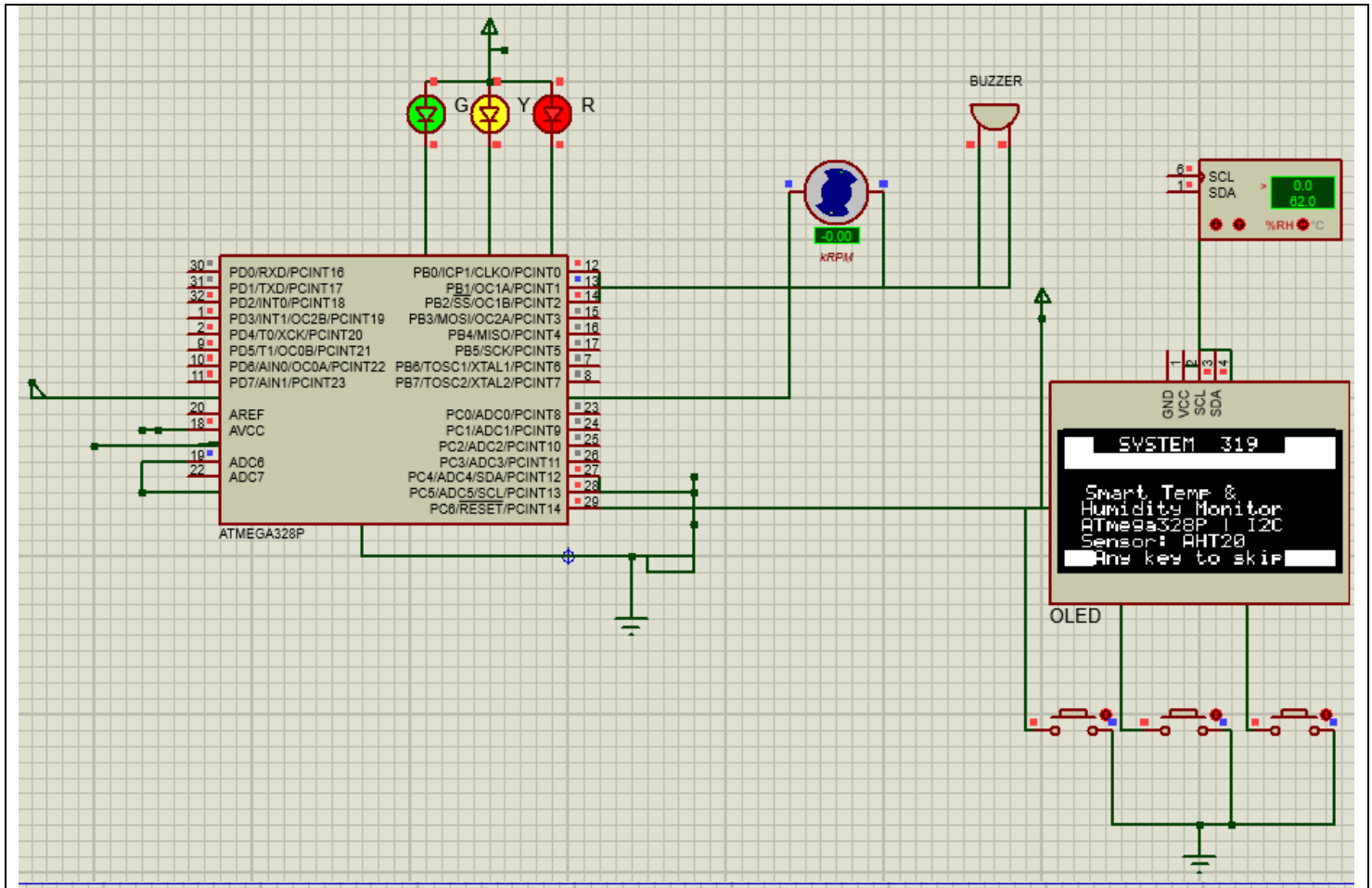
G
Y
R
BUZZER
-0.00
kRPM
SCL
SDA
0.0
62.0
%RH
°C
PD0/RXD/PCINT16
PD1/TXD/PCINT17
PD2/INT0/PCINT18
PD3/INT1/OC2B/PCINT19
PD4/T0/XCK/PCINT20
PD5/T1/OC0B/PCINT21
PD6/AIN0/OC0A/PCINT22
PD7/AIN1/PCINT23
AREF
AVCC
ADC6
ADC7
PB0/ICP1/CLKO/PCINT0
PB1/OC1A/PCINT1
PB2/SS/OC1B/PCINT2
PB3/MOSI/OC2A/PCINT3
PB4/MISO/PCINT4
PB5/SCK/PCINT5
PB6/TOSC1/XTAL1/PCINT6
PB7/TOSC2/XTAL2/PCINT7
PC0/ADC0/PCINT8
PC1/ADC1/PCINT9
PC2/ADC2/PCINT10
PC3/ADC3/PCINT11
PC4/ADC4/SDA/PCINT12
PC5/ADC5/SCL/PCINT13
PC6/RESET/PCINT14
ATMEGA328P
GND
VCC
SCL
SDA
SYSTEM 319
Smart Temp &
Humidity Monitor
ATmega328P | I2C
Sensor: AHT20
Any key to skip
OLED

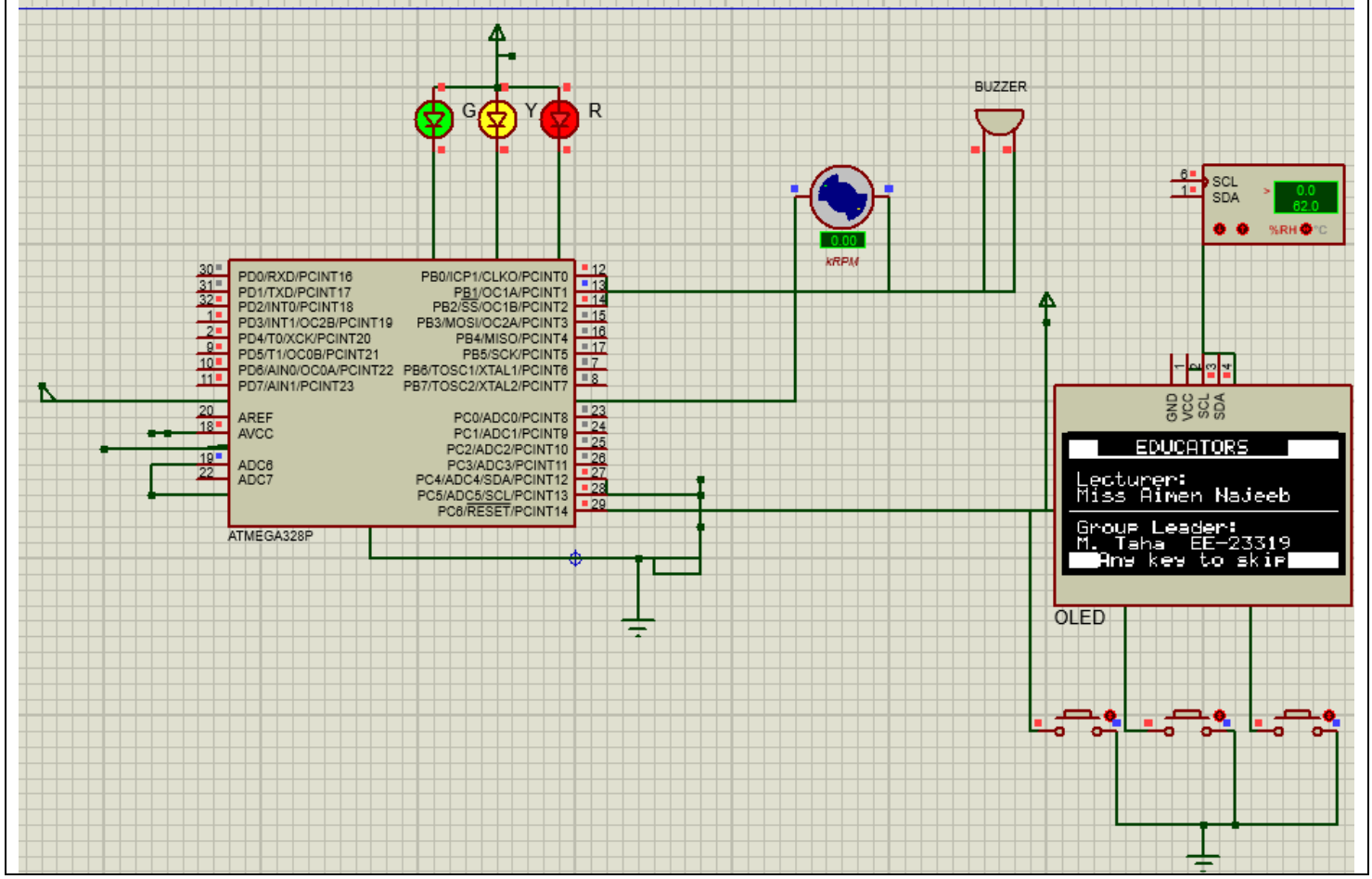
G
Y
R
BUZZER
0.00
kRPM
SCL
SDA
0.0
62.0
%RH
°C
PD0/RXD/PCINT16
PD1/TXD/PCINT17
PD2/INT0/PCINT18
PD3/INT1/OC2B/PCINT19
PD4/T0/XCK/PCINT20
PD5/T1/OC0B/PCINT21
PD6/AIN0/OC0A/PCINT22
PD7/AIN1/PCINT23
AREF
AVCC
ADC6
ADC7
PB0/ICP1/CLKO/PCINT0
PB1/OC1A/PCINT1
PB2/SS/OC1B/PCINT2
PB3/MOSI/OC2A/PCINT3
PB4/MISO/PCINT4
PB5/SCK/PCINT5
PB6/TOSC1/XTAL1/PCINT6
PB7/TOSC2/XTAL2/PCINT7
PC0/ADC0/PCINT8
PC1/ADC1/PCINT9
PC2/ADC2/PCINT10
PC3/ADC3/PCINT11
PC4/ADC4/SDA/PCINT12
PC5/ADC5/SCL/PCINT13
PC6/RESET/PCINT14
ATMEGA328P
GND
VCC
SCL
SDA
EDUCATORS
Lecturer:
Miss Aimen Najeeb
Group Leader:
M. Taha EE-23319
Any key to skip
OLED

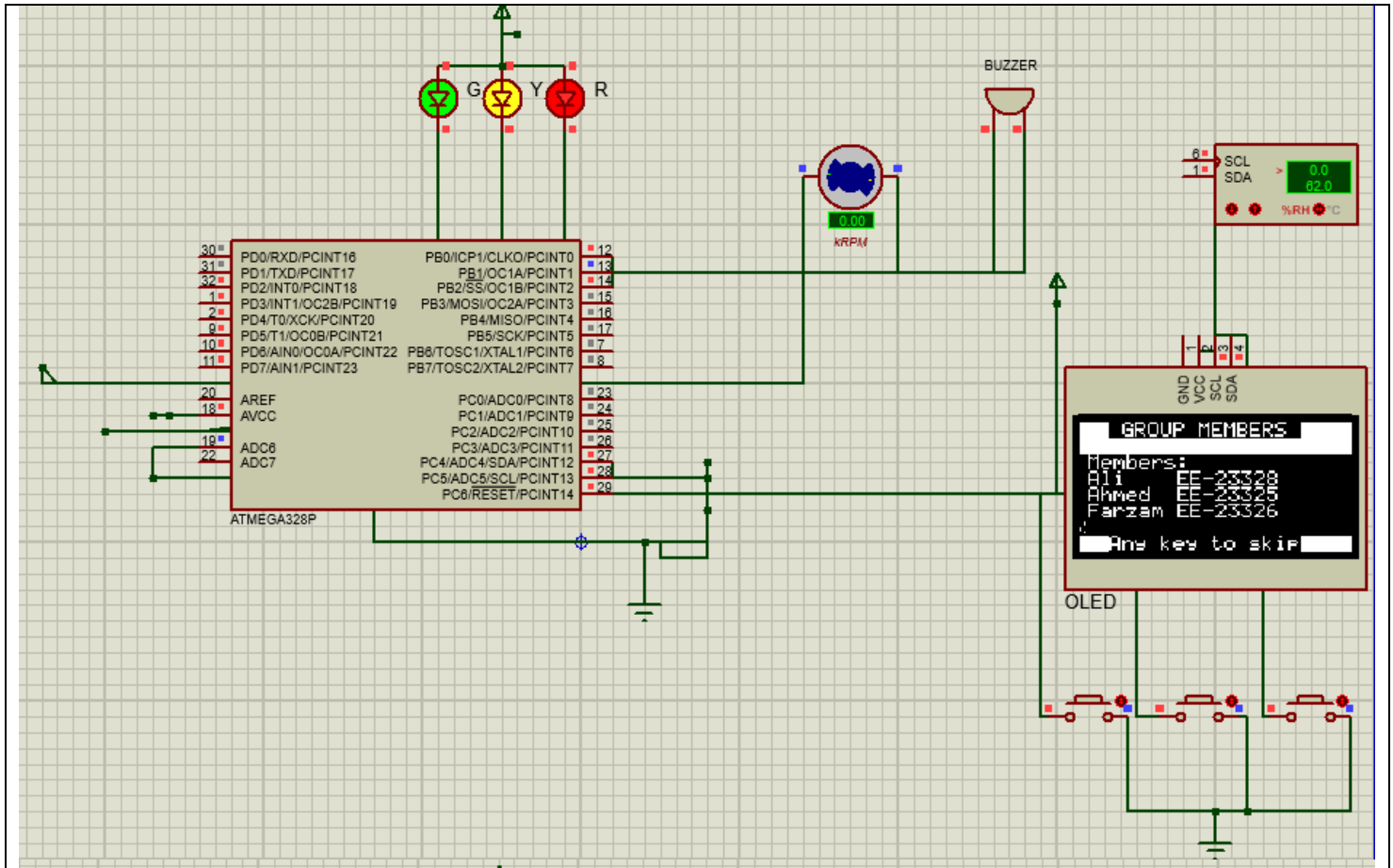
G
Y
R
BUZZER
0.00
kRPM
SCL
SDA
0.0
62.0
%RH
°C
PD0/RXD/PCINT16
PD1/TXD/PCINT17
PD2/INT0/PCINT18
PD3/INT1/OC2B/PCINT19
PD4/T0/XCK/PCINT20
PD5/T1/OC0B/PCINT21
PD6/AIN0/OC0A/PCINT22
PD7/AIN1/PCINT23
AREF
AVCC
ADC6
ADC7
PB0/ICP1/CLKO/PCINT0
PB1/OC1A/PCINT1
PB2/SS/OC1B/PCINT2
PB3/MOSI/OC2A/PCINT3
PB4/MISO/PCINT4
PB5/SCK/PCINT5
PB6/TOSC1/XTAL1/PCINT6
PB7/TOSC2/XTAL2/PCINT7
PC0/ADC0/PCINT8
PC1/ADC1/PCINT9
PC2/ADC2/PCINT10
PC3/ADC3/PCINT11
PC4/ADC4/SDA/PCINT12
PC5/ADC5/SCL/PCINT13
PC6/RESET/PCINT14
ATMEGA328P
GND
VCC
SCL
SDA
GROUP MEMBERS
Members:
Ali EE-23328
Ahmed EE-23325
Farzam EE-23326
Any key to skip
OLED

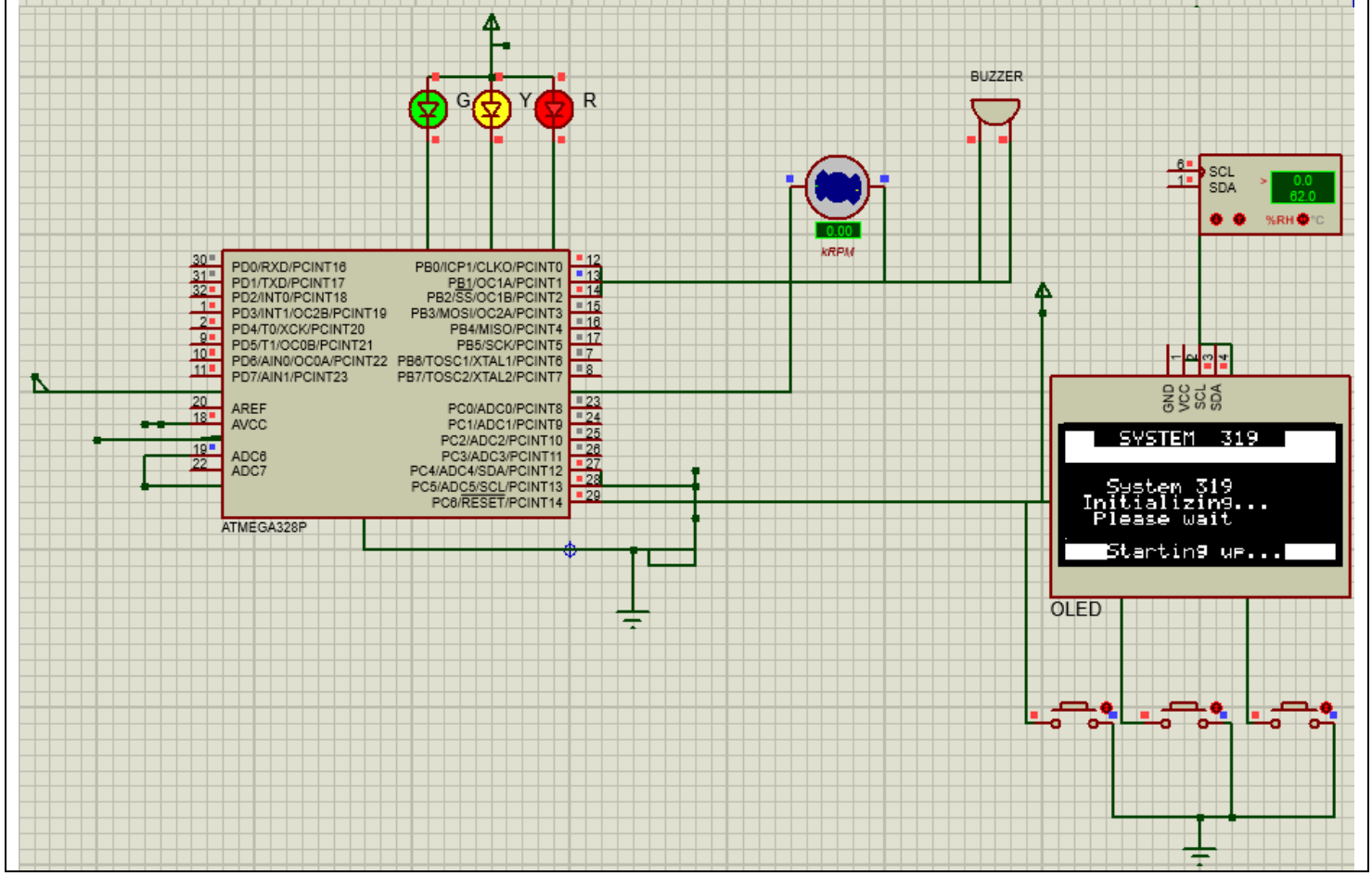
G
Y
R
BUZZER
0.00
kRPM
SCL
SDA
0.0
62.0
%RH
°C
PD0/RXD/PCINT16
PD1/TXD/PCINT17
PD2/INT0/PCINT18
PD3/INT1/OC2B/PCINT19
PD4/T0/XCK/PCINT20
PD5/T1/OC0B/PCINT21
PD6/AIN0/OC0A/PCINT22
PD7/AIN1/PCINT23
AREF
AVCC
ADC6
ADC7
PB0/ICP1/CLKO/PCINT0
PB1/OC1A/PCINT1
PB2/SS/OC1B/PCINT2
PB3/MOSI/OC2A/PCINT3
PB4/MISO/PCINT4
PB5/SCK/PCINT5
PB6/TOSC1/XTAL1/PCINT6
PB7/TOSC2/XTAL2/PCINT7
PC0/ADC0/PCINT8
PC1/ADC1/PCINT9
PC2/ADC2/PCINT10
PC3/ADC3/PCINT11
PC4/ADC4/SDA/PCINT12
PC5/ADC5/SCL/PCINT13
PC6/RESET/PCINT14
ATMEGA328P
GND
VCC
SCL
SDA
SYSTEM 319
System 319
Initializing...
Please wait
Starting up...
OLED

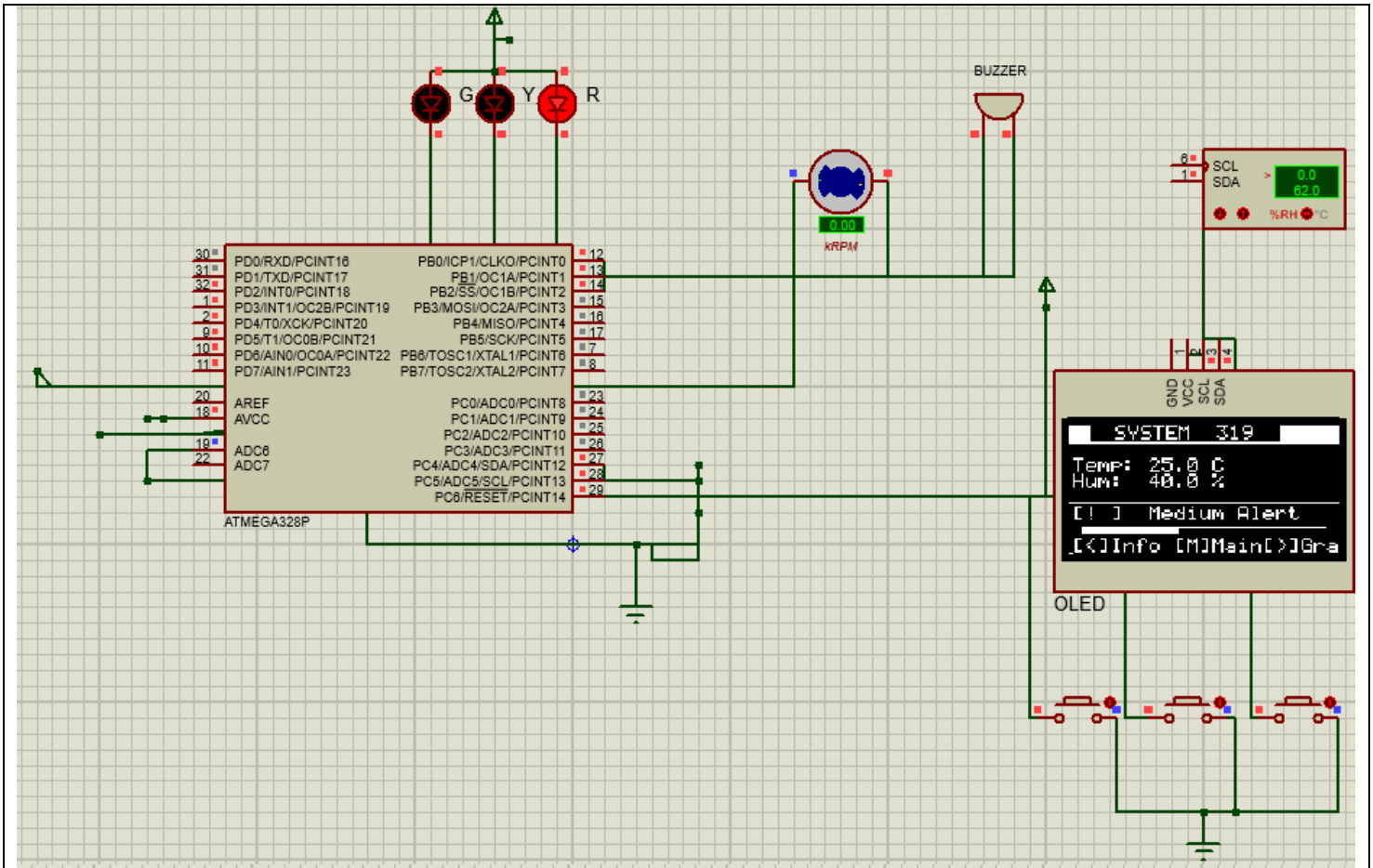
G
Y
R
BUZZER
0.00
kRPM
SCL
SDA
0.0
82.0
%RH
C
PD0/RXD/PCINT16
PD1/TXD/PCINT17
PD2/INT0/PCINT18
PD3/INT1/OC2B/PCINT19
PD4/T0/XCK/PCINT20
PD5/T1/OC0B/PCINT21
PD6/AIN0/OC0A/PCINT22
PD7/AIN1/PCINT23
AREF
AVCC
ADC6
ADC7
PB0/ICP1/CLKO/PCINT0
PB1/OC1A/PCINT1
PB2/SS/OC1B/PCINT2
PB3/MOSI/OC2A/PCINT3
PB4/MISO/PCINT4
PB5/SCK/PCINT5
PB6/TOSC1/XTAL1/PCINT6
PB7/TOSC2/XTAL2/PCINT7
PC0/ADC0/PCINT8
PC1/ADC1/PCINT9
PC2/ADC2/PCINT10
PC3/ADC3/PCINT11
PC4/ADC4/SDA/PCINT12
PC5/ADC5/SCL/PCINT13
PC6/RESET/PCINT14
ATMEGA328P
GND
VCC
SCL
SDA
SYSTEM 319
Temp: 25.0 C
Hum: 40.0 %
[!] Medium Alert
[<]Info [M]Main[>]Gra
OLED

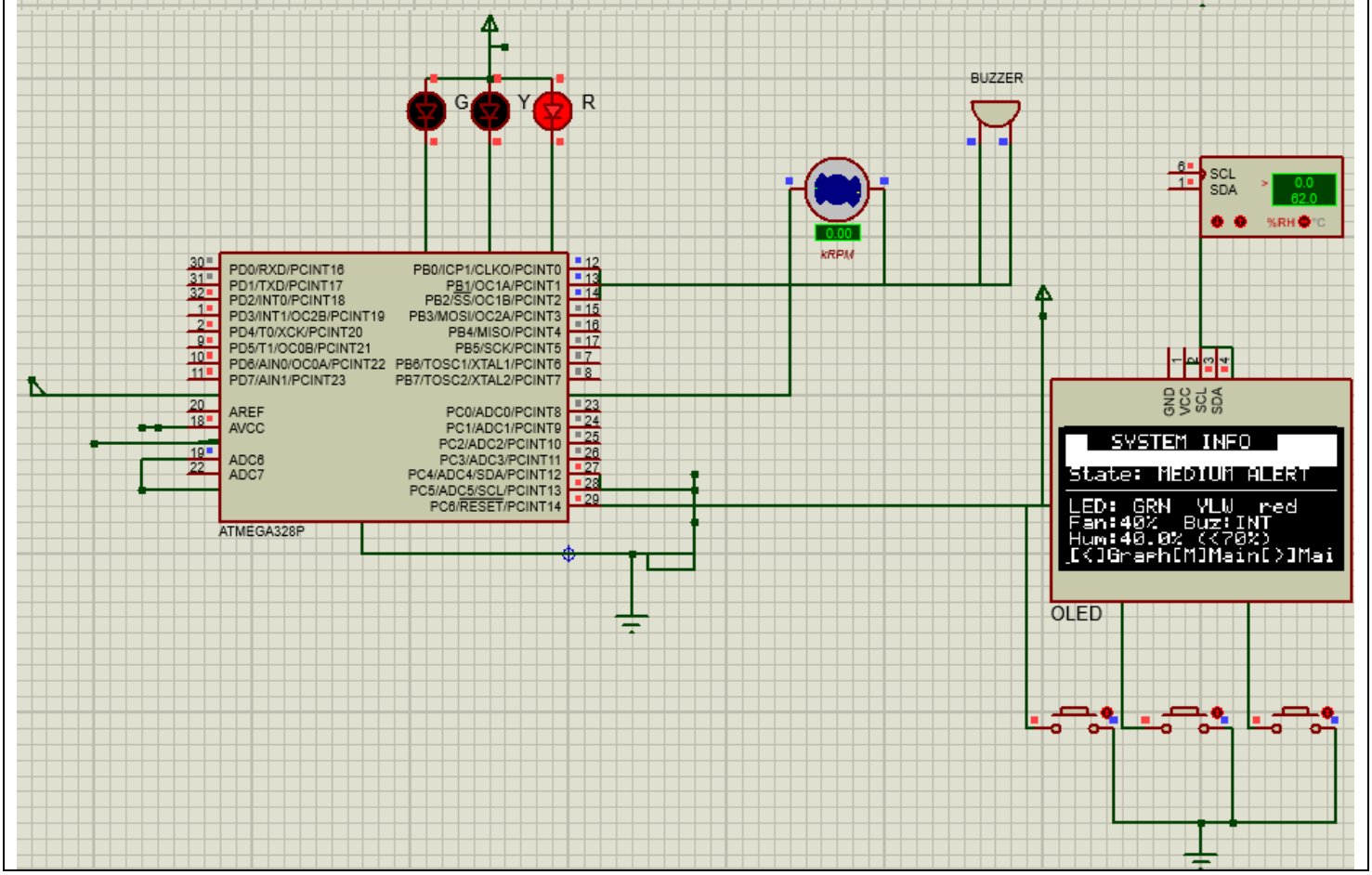
G
Y
R
BUZZER
0.00
kRPM
SCL
SDA
0.0
82.0
%RH
C
PD0/RXD/PCINT16
PD1/TXD/PCINT17
PD2/INT0/PCINT18
PD3/INT1/OC2B/PCINT19
PD4/T0/XCK/PCINT20
PD5/T1/OC0B/PCINT21
PD6/AIN0/OC0A/PCINT22
PD7/AIN1/PCINT23
AREF
AVCC
ADC6
ADC7
PB0/ICP1/CLKO/PCINT0
PB1/OC1A/PCINT1
PB2/SS/OC1B/PCINT2
PB3/MOSI/OC2A/PCINT3
PB4/MISO/PCINT4
PB5/SCK/PCINT5
PB6/TOSC1/XTAL1/PCINT6
PB7/TOSC2/XTAL2/PCINT7
PC0/ADC0/PCINT8
PC1/ADC1/PCINT9
PC2/ADC2/PCINT10
PC3/ADC3/PCINT11
PC4/ADC4/SDA/PCINT12
PC5/ADC5/SCL/PCINT13
PC6/RESET/PCINT14
ATMEGA328P
GND
VCC
SCL
SDA
SYSTEM INFO
State: MEDIUM ALERT
LED: GRN YLW red
Fan:40% Buz:INT
Hum:40.0% (<70%)
[<]Graph[M]Main[>]Mai
OLED

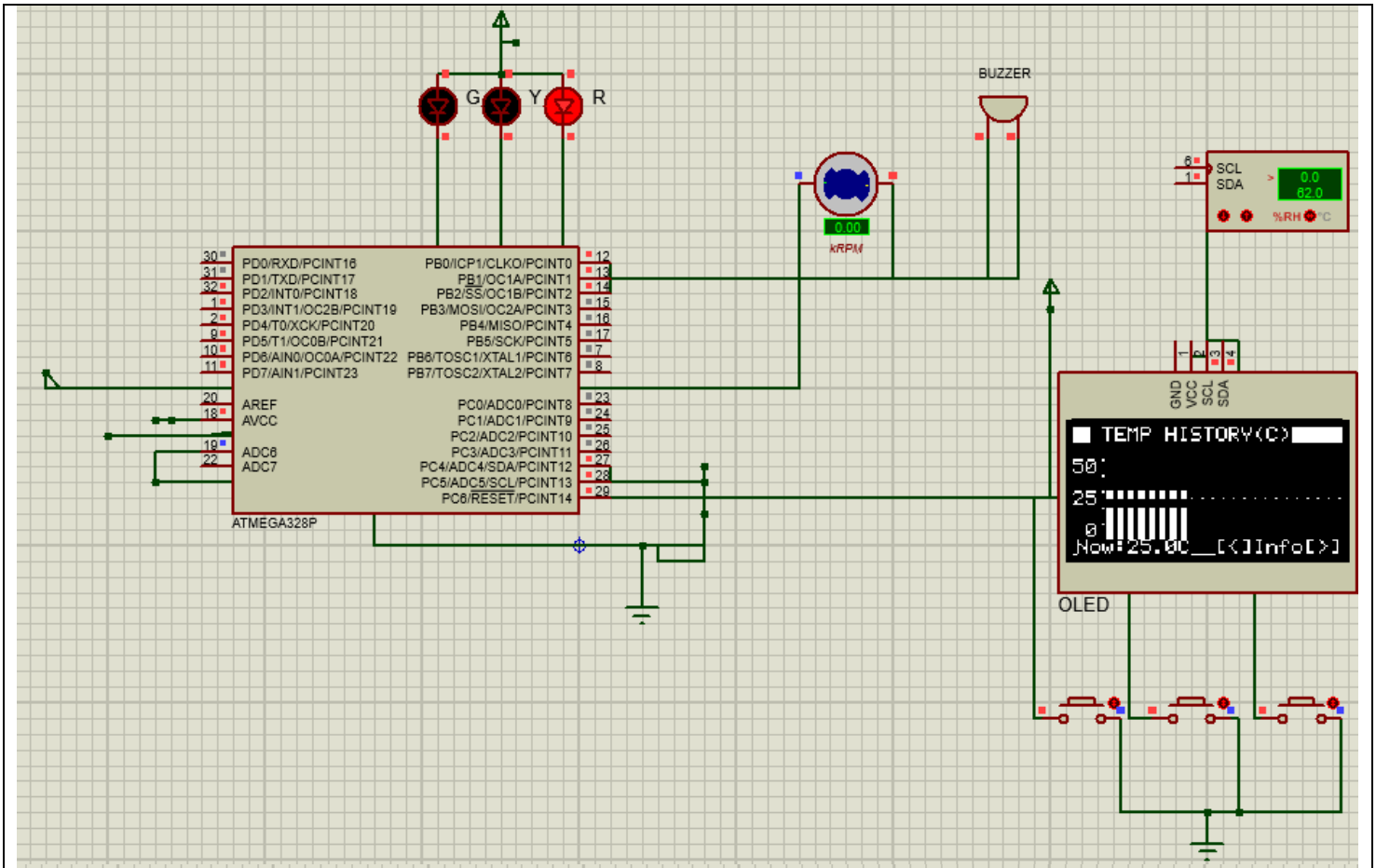
G
Y
R
BUZZER
0.00
kRPM
SCL
SDA
0.0
62.0
%RH
°C
PD0/RXD/PCINT16
PD1/TXD/PCINT17
PD2/INT0/PCINT18
PD3/INT1/OC2B/PCINT19
PD4/T0/XCK/PCINT20
PD5/T1/OC0B/PCINT21
PD6/AIN0/OC0A/PCINT22
PD7/AIN1/PCINT23
AREF
AVCC
ADC6
ADC7
PB0/ICP1/CLKO/PCINT0
PB1/OC1A/PCINT1
PB2/SS/OC1B/PCINT2
PB3/MOSI/OC2A/PCINT3
PB4/MISO/PCINT4
PB5/SCK/PCINT5
PB6/TOSC1/XTAL1/PCINT6
PB7/TOSC2/XTAL2/PCINT7
PC0/ADC0/PCINT8
PC1/ADC1/PCINT9
PC2/ADC2/PCINT10
PC3/ADC3/PCINT11
PC4/ADC4/SDA/PCINT12
PC5/ADC5/SCL/PCINT13
PC6/RESET/PCINT14
ATMEGA328P
GND
VCC
SCL
SDA
TEMP HISTORY(C)
50
25
0
Now:25.0C_[<]Info[>]
OLED

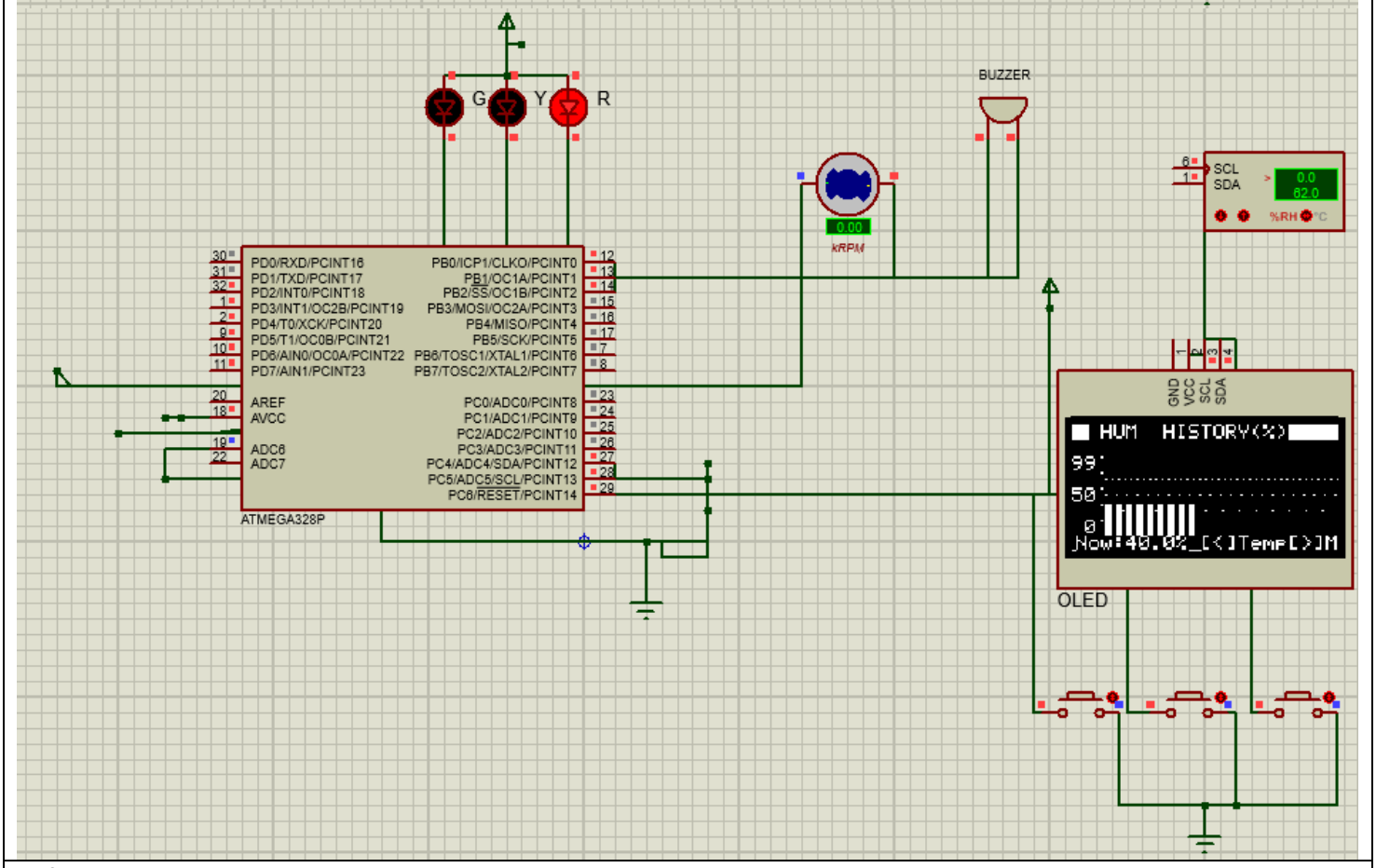
G
Y
R
BUZZER
0.00
kRPM
SCL
SDA
0.0
62.0
%RH
°C
PD0/RXD/PCINT16
PD1/TXD/PCINT17
PD2/INT0/PCINT18
PD3/INT1/OC2B/PCINT19
PD4/T0/XCK/PCINT20
PD5/T1/OC0B/PCINT21
PD6/AIN0/OC0A/PCINT22
PD7/AIN1/PCINT23
AREF
AVCC
ADC6
ADC7
PB0/ICP1/CLKO/PCINT0
PB1/OC1A/PCINT1
PB2/SS/OC1B/PCINT2
PB3/MOSI/OC2A/PCINT3
PB4/MISO/PCINT4
PB5/SCK/PCINT5
PB6/TOSC1/XTAL1/PCINT6
PB7/TOSC2/XTAL2/PCINT7
PC0/ADC0/PCINT8
PC1/ADC1/PCINT9
PC2/ADC2/PCINT10
PC3/ADC3/PCINT11
PC4/ADC4/SDA/PCINT12
PC5/ADC5/SCL/PCINT13
PC6/RESET/PCINT14
ATMEGA328P
GND
VCC
SCL
SDA
HUM HISTORY(%)
99
50
0
Now:40.0%_[<]Temp[>]M
OLED

References

[1] AOSONG Electronics Co., Ltd. (2020). AHT20 — Calibrated digital temperature and humidity sensor: Datasheet (Rev. 1.1). https://asairsensors.com/wp-content/uploads/2021/09/Data-Sheet-AHT20-ASAIR-V1.1.pdf

[2] Solomon Systech Limited. (2008). SSD1306: 128 × 64 dot matrix OLED/PLED segment/common driver with controller (Rev. 1.1). https://cdn-shop.adafruit.com/datasheets/SSD1306.pdf

[3] Atmel Corporation. (2015). ATmega328P 8-bit AVR microcontroller with 32 K bytes in-system programmable flash: Datasheet (Rev. DS40001984A). Microchip Technology. https://ww1.microchip.com/downloads/en/DeviceDoc/Atmel-7810-Automotive-Microcontrollers-ATmega328P_Datasheet.pdf

[4] Barnett, R., Cox, S., & O'Cull, L. (2007). Embedded C programming and the Atmel AVR (2nd ed.). Delmar Cengage Learning.

[5] Labrosse, J. J. (2002). Embedded systems building blocks: Complete and ready-to-use modules in C (2nd ed.). R&D Books.

[6] Labcenter Electronics Ltd. (2023). Proteus 8 professional — VSM simulation reference manual (Version 8.15). https://www.labcenter.com/documentation/

[7] Free Software Foundation. (2024). AVR-LibC reference manual (Version 2.1.0). https://avr-libc.nongnu.org/user-manual/

[8] Microchip Technology Inc. (2024). AVR-GCC toolchain: AVR® MCU family compiler documentation. https://www.microchip.com/en-us/tools-resources/develop/microchip-studio/gcc-compilers

[9] Muhammad Taha Ansari, "Humidity And Temperature Sensor," GitHub repository. [Online]. Available: https://github.com/Muhammad-Taha-Ansari/Humidity-And-Temperature-Sensor. [Accessed: May 11, 2026].*]*

Skill(s) to be assessed	Extent of Achievement			
	50%	65%	80%	100%
Application of theoretical knowledge for analysis	Unable to relate and recall any theory	Partially relates and recalls the theory	Recalls theoretical knowledge and relates it to the task without major mistakes	Recalls theoretical knowledge and relates it to the task with no mistake
Updates in Resource identification and allocation, task identification and scheduling, risk assessment and management	No updates or revision	----------	----------	Reasonable updates and revision presented
Updates in Bill of Materials (BOM) and budgeting	No updates in BOM and budgeting	----------	----------	Updates incorporated in BOM and budgeting with final expense
Realisation of design, testing and validation	Unable to synthesize and also unable to test/validate	Able to synthesize partially and able to test/validate OR Able to synthesize but partially able to test/validate	Able to synthesize and test/validate without major mistakes	Able to synthesize and test/validate without any mistake

Skill(s) to be assessed	Extent of Achievement			
	50%	65%	80%	100%
Application of theoretical knowledge for analysis	Unable to relate and recall any theory	Partially relates and recalls the theory	Recalls theoretical knowledge and relates it to the task without major mistakes	Recalls theoretical knowledge and relates it to the task with no mistake
Updates in Resource identification and allocation, task identification and scheduling, risk assessment and management	No updates or revision	----------	----------	Reasonable updates and revision presented
Updates in Bill of Materials (BOM) and budgeting	No updates in BOM and budgeting	----------	----------	Updates incorporated in BOM and budgeting with final expense
Realisation of design, testing and validation	Unable to synthesize and also unable to test/validate	Able to synthesize partially and able to test/validate OR Able to synthesize but partially able to test/validate	Able to synthesize and test/validate without major mistakes	Able to synthesize and test/validate without any mistake

Skill(s) to be assessed	Extent of Achievement			
	50%	65%	80%	100%
Application of theoretical knowledge for analysis	Unable to relate and recall any theory	Partially relates and recalls the theory	Recalls theoretical knowledge and relates it to the task without major mistakes	Recalls theoretical knowledge and relates it to the task with no mistake
Updates in Resource identification and allocation, task identification and scheduling, risk assessment and management	No updates or revision	----------	----------	Reasonable updates and revision presented
Updates in Bill of Materials (BOM) and budgeting	No updates in BOM and budgeting	----------	----------	Updates incorporated in BOM and budgeting with final expense
Realisation of design, testing and validation	Unable to synthesize and also unable to test/validate	Able to synthesize partially and able to test/validate OR Able to synthesize but partially able to test/validate	Able to synthesize and test/validate without major mistakes	Able to synthesize and test/validate without any mistake

Skill(s) to be assessed	Extent of Achievement			
	50%	65%	80%	100%
Application of theoretical knowledge for analysis	Unable to relate and recall any theory	Partially relates and recalls the theory	Recalls theoretical knowledge and relates it to the task without major mistakes	Recalls theoretical knowledge and relates it to the task with no mistake
Updates in Resource identification and allocation, task identification and scheduling, risk assessment and management	No updates or revision	----------	----------	Reasonable updates and revision presented
Updates in Bill of Materials (BOM) and budgeting	No updates in BOM and budgeting	----------	----------	Updates incorporated in BOM and budgeting with final expense
Realisation of design, testing and validation	Unable to synthesize and also unable to test/validate	Able to synthesize partially and able to test/validate OR Able to synthesize but partially able to test/validate	Able to synthesize and test/validate without major mistakes	Able to synthesize and test/validate without any mistake